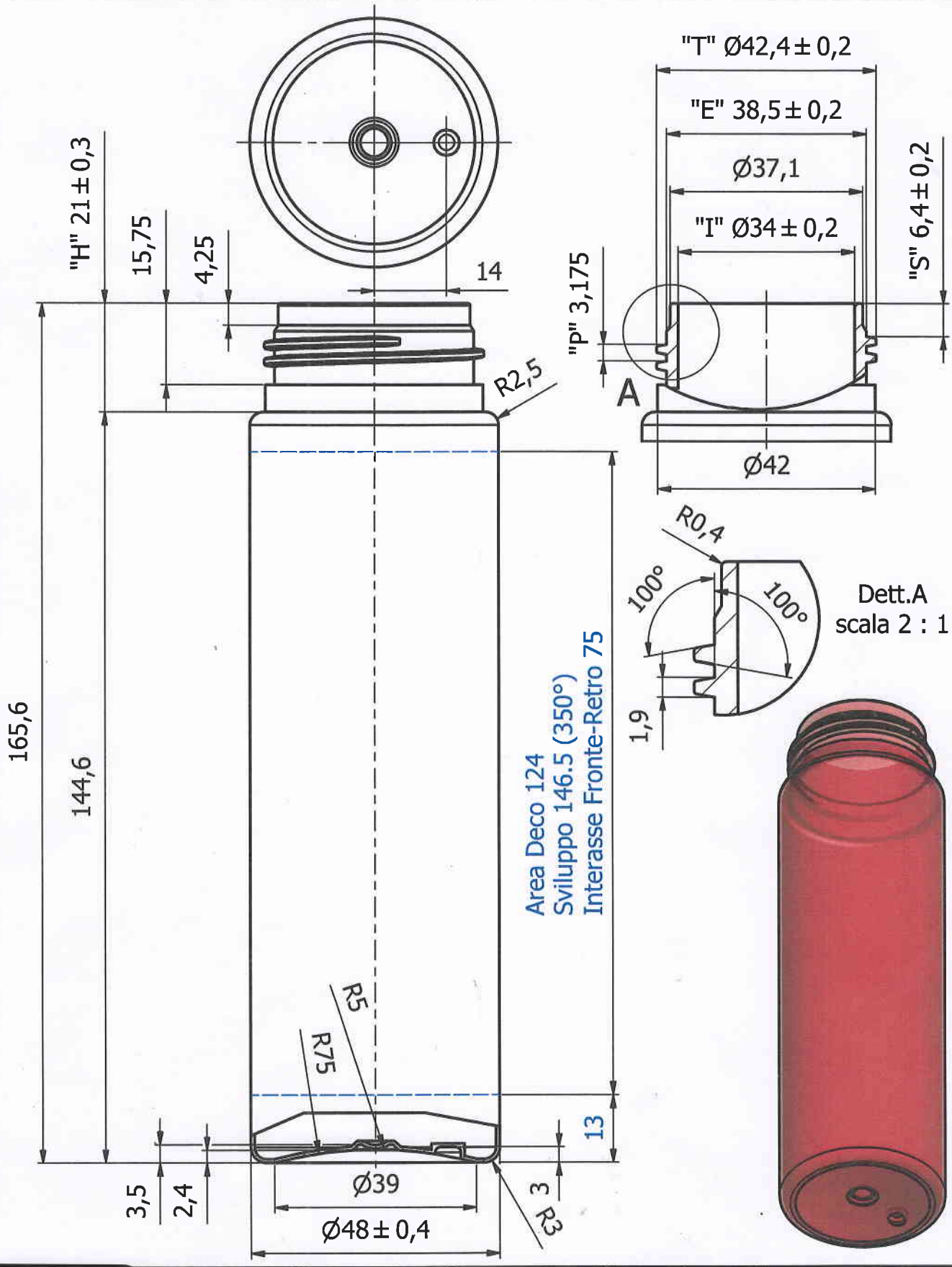

Controllato da	Approvato da	Data creazione 08/05/2010	Toll. Gen. ± 1 %	Scala 1:1	Materiale generico/interno PET
Controllato in data	Approvato in data	Capacità (ml) 266 ±4	Peso (gr) 26 ±1.5		Materiale esterno
Descrizione FLACONE CILINDRICO MUSSEN 200ml					N° Disegno F-0271-00

spa , vietata la riproduzione e divulgazione senza autorizzazione - This drawing is property of VERVE spa , reproduction and dissemination without permission is prohibited

Vexel
www.vexel.it

Application torque: 2.0 N-m-/+0.1 N-m
18.0 lbf.in-/+0.9 lbf.in

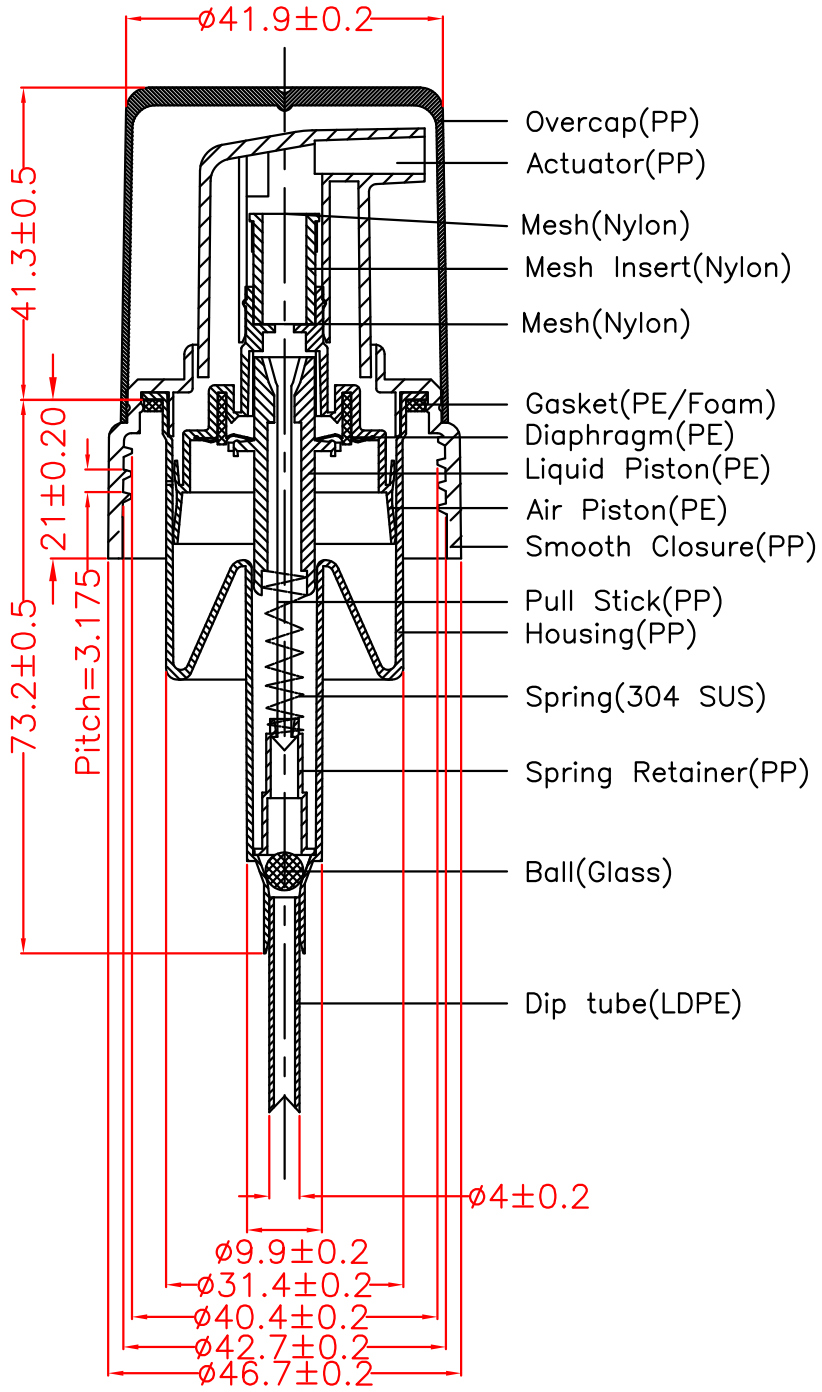

Note: All dimensions are in millimeters

CONFIDENTIAL

This document contains proprietary information of Arminak & Associates. Its receipt or possession does not convey any rights to reproduce or disclose its contents or to manufacture, use, or sell anything it may describe. Reproduction, disclosure, or use without specific written authorization of Arminak & Associates, Inc. is strictly forbidden.

43 mm 0.8 cc Foamer Pump

Rev.	Date	Description					
				Part num.	AAF2S08D	Sheet	1 of 1
Date	12/03/09	Scale	1:1	Dwg code.	FP-F2S08D-43		

Arminak & Associates

1350 Mountain View Circle , Azusa, CA 91702

Tel. (626)358-4804 Fax (626)358-4688

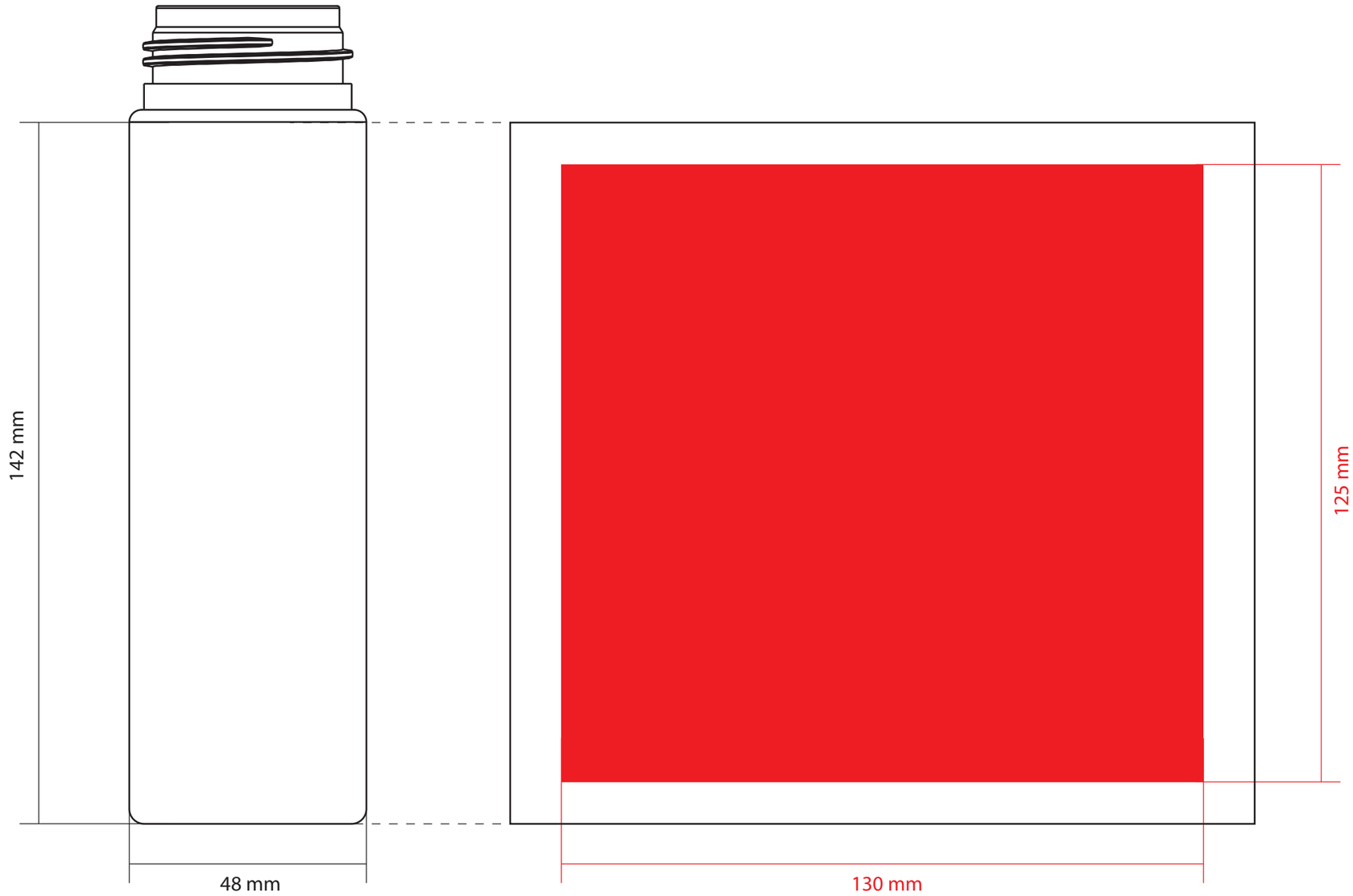

DATA:	
CODICE LD: 327-AS58	
CODICE CLIENTE:	
CLIENTE:	
PRODOTTO: FLACONE FOAMER 200 ml	
COLORE PRODOTTO:	
VARIANTE:	
COLORI STAMPA:	
TECNICA STAMPA: SERIGRAFIA	
NOTE:	